PART No. CWST418NK

for more information visit

www.hammfg.com

Data subject to change without notice

Isometric drawing Not to Scale

TOP VIEW

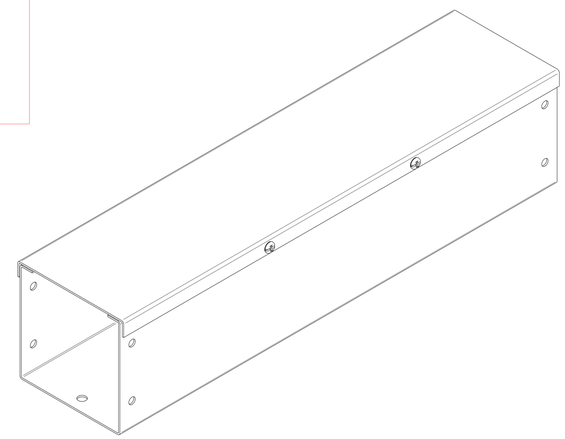

ISOMETRIC VIEW

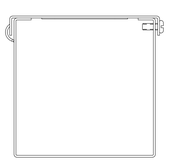

SIDE VIEW

FRONT VIEW

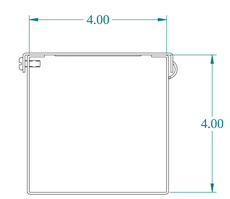

SIDE VIEW

BACK VIEW

BOTTOM VIEW