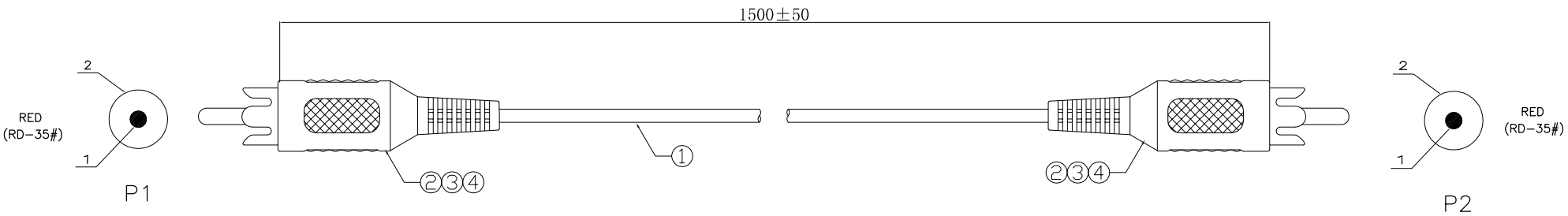

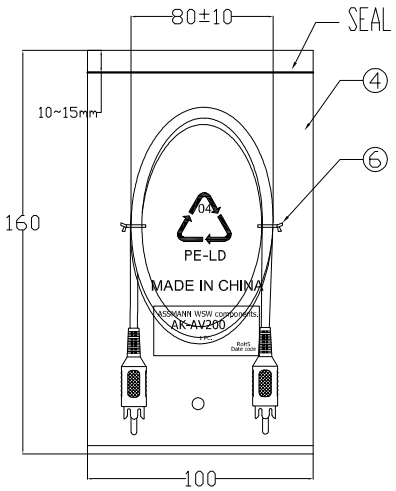

Electrical test:
1.100% short,open,miss wire test
2.Conduct resistance:2 Ohm(max)
3.Insulation resistance:5Mohm(min)
4.dielectric test:DC 300V

PIN ASSIGNMENT

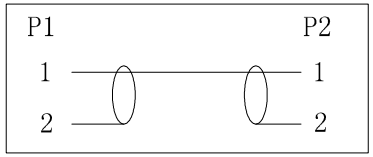

NO.	NAME	Q'TY	SPECIFICATION
⑦	TIE	2	BLACK L=80mm
⑥	PE BAG	1/10	CLEAR SIZE: 230*300*0.05mm PRINT BLACK"MADE IN CHINA"+"10PCS"
⑤	PE BAG	1	CLEAR SIZE: 100*160*0.05mm PRINT BLACK"MADE IN CHINA"+"1PC"
④	TUBE	2	HEAT SHRINK TUBE BLACK OD1.5*10mm
③	IN JACKET	1.6g	CLEAR LD-PE (Mould NO.:NM-006)
	OUT JACKET	6.6g	PVC-40P RED(RD-35),(Mould NO.WM-009)
②	CONN	2	RCA PLUG MALE BLOSSOM TYPE NI-PLATED INSULATOR COLOR:BROWN
①	CABLE	1	T.C (10/0.12+28/0.12)*1C OD3.0MM JACKET PVC COLOR BLACK L=1500±10mm.

RoHS compliant
Unit: mm

Scale	Free					Date	Name	Customer-No.
TOLERANCE					Drawn	20.02.2017	Amy	
					Approved	20.02.2017	Amy	ASSMANN WSW-No. AK-AV200
DIM	TOL							Drawing-No. ASS 7861 CA rev00
		⓪	Drawn	20.02.2017	Amy			
Angle	TOL	Id.	Modification	Date	Name			Replace / Sheet

ASSMANN WSW components